SPECIFICATION SHEET 516 WITHAM
USA / CANADA

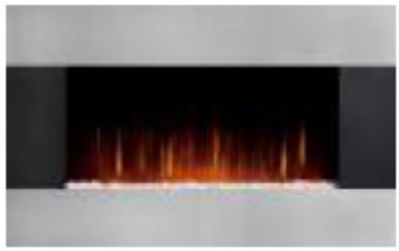

516-UR includes black trim with attachable stainless steel panels

MODEL #:	516U-R
FINISHES:	BLACK OR BLACK w S. STEEL
FITTING:	WALL HANGING ONLY
LAUNCH:	FEB 2008
WEIGHT:	67 lb, 32Kgs
LAUNCH:	FEB 2008

CONTROLS:	TOUCH CONTROL
	REMOTE CONTROL
FUEL EFFECTS:	PEBBLES, SHELLS, CHIPPINGS
HEATER OUTPUT:	4,500 BTU, 1.3 Kw
LIGHT BULBS:	3 x 40W, ES27
CABLE LENGTH:	6 Ft, 1.8 METER

FIRE DIMENSIONS					
H	23 5/8"	W	35 1/2"	D	6 1/2"
PACKAGING DIMENSIONS					
H	26 7/9"	W	38 4/7"	D	10 5/8"

ELECTRIC SPECIFICATIONS:	
VOLTAGE	120VAC, 60Hz
TOTAL AMPS	12 AMPS
TOTAL WATTS	1420 WATTS
HEATER RATING	1300 WATTS

Comments:

- This model has a black trim. Included in the box are 2 stainless steel panels, which the customer can install themselves. The panels are attach with double sided tape, which has already been applied to the panels.
- There is a master switch on the right-hand side of the fire. This will switch off the fire completely. Please ensure the master switch is in the "on" position, before switching the fire on with the remote control or touch control.
- Bulb changing is made easy through a pull-down flap at the bottom of the fire.

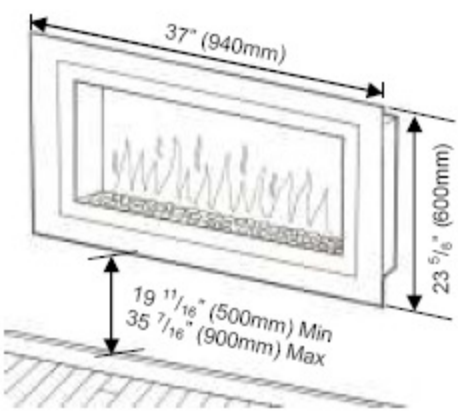

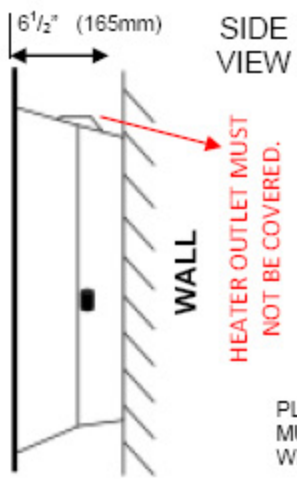

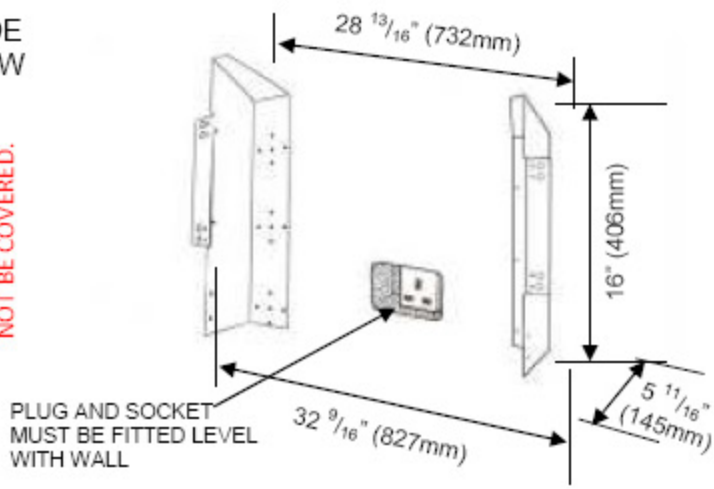

WALL FIXINGS

NYLON WALL PLUGS SUPPLIED SUITABLE FOR MASONRY AND AERATED CONCERETE ONLY.

FOR PLASTERBOARD AND CAVITY FITTINGS, ADDITIONAL FIXING WILL BE REQUIRED.